A

MICRO-PROJECT REPORT

ON

"SMART IRRIGATION "

Submitted By:

1. ***Mr. Shubham Ashok Surve*** ***Roll no. 32***
2. ***Mr. Om Mahesh Dhane*** ***Roll No. 43***
3. ***Mr. Arman Aadam Mulla*** ***Roll no. 64***

In the partial fulfillment of the requirement of Diploma in Electronics and Telecommunication Engineering

Approved By, Maharashtra State Board of Technical Education, Mumbai

UNDER THE GUIDANCE

Mr. P. S. Valte

Department of Electronics and Tele-Communication Engineering

Shri Vitthal Education & Research Institute's

COLLEGE OF ENGINEERING (POLYTECHNIC), PANDHARPUR

Year 2024-2025

Shri Vitthal Education & Research Institute's

COLLEGE OF ENGINEERING (POLYTECHNIC), PANDHARPUR

Certificate

This is to certify that,

1) **Mr. Shubham Ashok Surve** **Enrollment No. 2210740278**
2) **Mr. Om Mahesh Dhane** **Enrollment No. 2210740289**
3) **Mr. Arman Aadam Mulla** **Enrollment No. 23212470406**

Of TY **Electronics and Tele-Communication Engineering** have satisfactorily and successfully completed their micro project entitled as, **"SMART IRRIGATION"** And have submitted this micro project report in partial fulfillment of the requirements for the Subject / Course "**Mobile And Wireless Communication (Code:- 225333)"** of the MSBTE during academic year 2024-25.

Date: /11/2024

Project Guide
(Mr. P. S. Valte)

Head Of Department
(Mr. P. S. Valte)

Principal
(Dr. N. D. Misal)

Annexture I

SMART IRRIGATION

1.0 Aim of Micro-project:

Aim of the IOT based Irrigation system is to reduce the wastage of water by providing blockage for the excessive water quantity to plants and also to give water on right time to plants result in proper growth in plant.

Implement this project in real world which can remotely monitor and controlled wirelessly so in result we can access the control and monitoring facility with the help of wireless technology like Wi Fi.

Improve efficiency in agricultural or home gardening applications by reducing the need for manual labor and providing a reliable, intelligent irrigation solution.

2.0 Course Outcomes:

After completion of this project student will able to ;

a. Select relevant wireless technology suitable for various applications.
b. Test the performance of various wireless protocols.
c. Assess performance of standards of different cellular mobile systems.

3.0 Proposed Methodology:

1) Group discussion for solution of irrigation problem will be carried using various sources and wireless technology to overcome this problems.

2) We will use moisture sensor to measure the moisture of soil and ESP 8266 node MCU Wi-Fi module as controller to monitor and control the pump from anywhere and at any time.

3) Collection of Data : We will collect more information and steps to connect the ESP 8266 to wi-fi and to IOT platform that make the project successfully.

4) Designing circuit required to work this project efficiently and also to make this project cost effective.

5) Software requirement : develop code for ESP8266 node MCU to connect moisture sensor and to monitor and control the pump through IOT platform.

6) We will Implement this project in real time and testing proper working of project also troubleshooting the errors to make it successful.

7) Analyzing , understanding and observing the effects of project on environment.

4.0 Action Plan:

Sr. No.	Details of activity	Planned start date	Planned End date	Name of Responsible Team Member
1	Discussion of Topic	12/08/2024	18/08/2024	Mr. S. S. Surve Mr. O. M. Dhane Mr. A. A. Mulla
2	Collection of Data	25/08/2024	28/08/2024	
3	Discussion of content	05/09/2024	12/09/2024	
4	Editing of content	17/09/2024	26/09/2024	
5	Approvement of Project	02/10/2024	07/10/2024	
6	Final Submission	/11/2024	/11/2024	

5.0 Required Resources:

Sr. No.	Name of Resource	Specifications
1.	Computer system with broad specification	Intel Core i5 12th generation
2.	Relevant Software	Arduino IDE
3.	IOT platform	Blynk IOT

Name of Team Members with Enrollment Numbers :

1) **Mr. Shubham Ashok Surve** **Enrollment No. 2210740278**
2) **Mr. Om Mahesh Dhane** **Enrollment No. 2210740289**
3) **Mr. Arman Aadam Mulla** **Enrollment No. 23212470406**

(Mr. P. S. Valte)
Signature
Subject Teacher

Annexture II

SMART IRRIGATION

1.0 Rationale:

The Importance of this project is to optimize the excessive use of water in the watering system for plants . Due to Implementation of this project moisturity of soil remain constant at perfect PH level. Soil quality becomes greater so plant in that soil does not get any lack of water and minerals for their growth.

To access the each every user to the monitoring and controlling the motor pump and moisture of soil wirelessly by using wireless technology (WiFi , Bluetooth etc.) so that it reduces the cost required for the labor.

Make a crucial role in SMART farming to improve the outcomes from farm in more efficient way by enabling the farmer to control all the work in easy way so that it reduces the burden of the farmer give the perfection in farming.

2.0 Aim of Micro-project:

Aim of the IOT based Irrigation system is to reduce the wastage of water by providing blockage for the excessive water quantity to plants and also to give water on right time to plants result in proper growth in plant.

Implement this project in real world which can remotely monitor and controlled wirelessly so in result we can access the control and monitoring facility with the help of wireless technology like Wi-Fi.

Improve efficiency in agricultural or home gardening applications by reducing the need for manual labor and providing a reliable, intelligent irrigation solution.

3.0 Course Outcomes Achieved:

After completion of this project student will able to ;

a. Select relevant wireless technology suitable for various applications.
b. Test the performance of various wireless protocols.
c. Assess performance of standards of different cellular mobile systems.

4.0 Literature review:

1) **Divya J., Divya M., Janani V. :-** In this literature , SMART irrigation for agriculture is done by measuring the temperature of plant and according to temperature the motor is ON or OFF they used Temperature sensor, Humidity sensor and PH sensor as tool in project.

2) **Anushree Math, Layak Ali, Pruthviraj U.** :- The students of National Institute of Technology made a smart drip irrigation system by monitoring and managing plant healthiness on webpage with the help of RTC module, solenoid coil and Raspberry Pi camera that gives live streaming to webpage.

3) **G. Sushanth, and S. Sujatha :-** They builded smart irrigation system that enable to control the wetness of soil , monitoring the temperature humidity and even movement of animal that might damage crop using sensor then send SMS notification as well as app notification developed for same farmer's smart phone via Wi-Fi/3G/4G they used duplex communication link based on cellular internet interface.

4) **H.G.C.R. Laksiri, H.A.C. Dharmagunawardhana, J.V. Wijayakulasooriya :-** In recent literature, the smart irrigation system is get added by rain drop, humidity, temperature sensor to perform on the real time variation in weather. According to weather prediction farmers get notified by the wireless technology to manage water distribution.

5.0 Actual Methodology Followed:

1) Identified problem in watering system to plants i.e irregularity in watering the plants and cannot control by the human from anywhere and anytime result in improper growth of plant.

2) Group discussion carried out for solution of this problem using various sources and wireless technology to overcome this problems.

3) Used moisture sensor to measure the moisture of soil and ESP 8266 node MCU Wi-Fi module as controller to monitor and control the pump from anywhere and at any time.

4) Collected data, information and steps to connect the ESP 8266 to wi-fi and to IOT platform that make the project successfully.

5) Designed circuit required to work this project efficiently and also to make this project cost effective.

6) Software requirement : developed code for ESP8266 node MCU to connect moisture sensor and to monitor and control the pump through IOT platform.

7) Implementation of project : Implemented this project in real time and testing proper working of project also troubleshooting the errors to make it successful.

8) Analyzed, understood and observed the effects of project on environment.

6.0 Actual Resources Used:

Sr. No.	Name of Resource	Specifications
1.	Computer system with broad specification	Intel Core i5 12th generation
2.	Relevant Software Used	Arduino IDE
3.	IOT platform	Blynk IOT

7.0 Output:

A. <u>Components used and there Information:</u>

Sr. No.	Components Used	Specification
1.	IOT platform	Blynk IOT
2.	Libraries	Blynk, ESP8266
3.	Controller	ESP8266 Node MCU Wi-Fi module
4.	Moisture Sensor	Chipset LM393
5.	Water pump	5V motor
6.	Relay	Single channel
7.	Connecting wires	As per requirements

1. Node MCU (ESP8266):

The NodeMCU (Node Micro Controller Unit) is an open-source software and hardware development environment built around an inexpensive System-on-a-Chip (SoC) called the ESP8266. The ESP8266, designed and manufactured by Express if Systems, contains the crucial elements of a computer: CPU, RAM, networking (Wi-Fi), and even a modern operating system and SDK. That makes it an excellent choice for Internet of Things (IoT) projects of all kinds.

However, as a chip, the ESP8266 is also hard to access and use. You must solder wires, with the appropriate analog voltage, to its pins for the simplest tasks such as powering it on or sending a keystroke to the “computer” on the chip. You also have to program it in low-level machine instructions that can be interpreted by the chip hardware. This level of integration is not a problem using the ESP8266 as an embedded controller chip in mass-produced electronics. It is a huge burden for hobbyists, hackers, or students who want to experiment with it in their own IoT projects

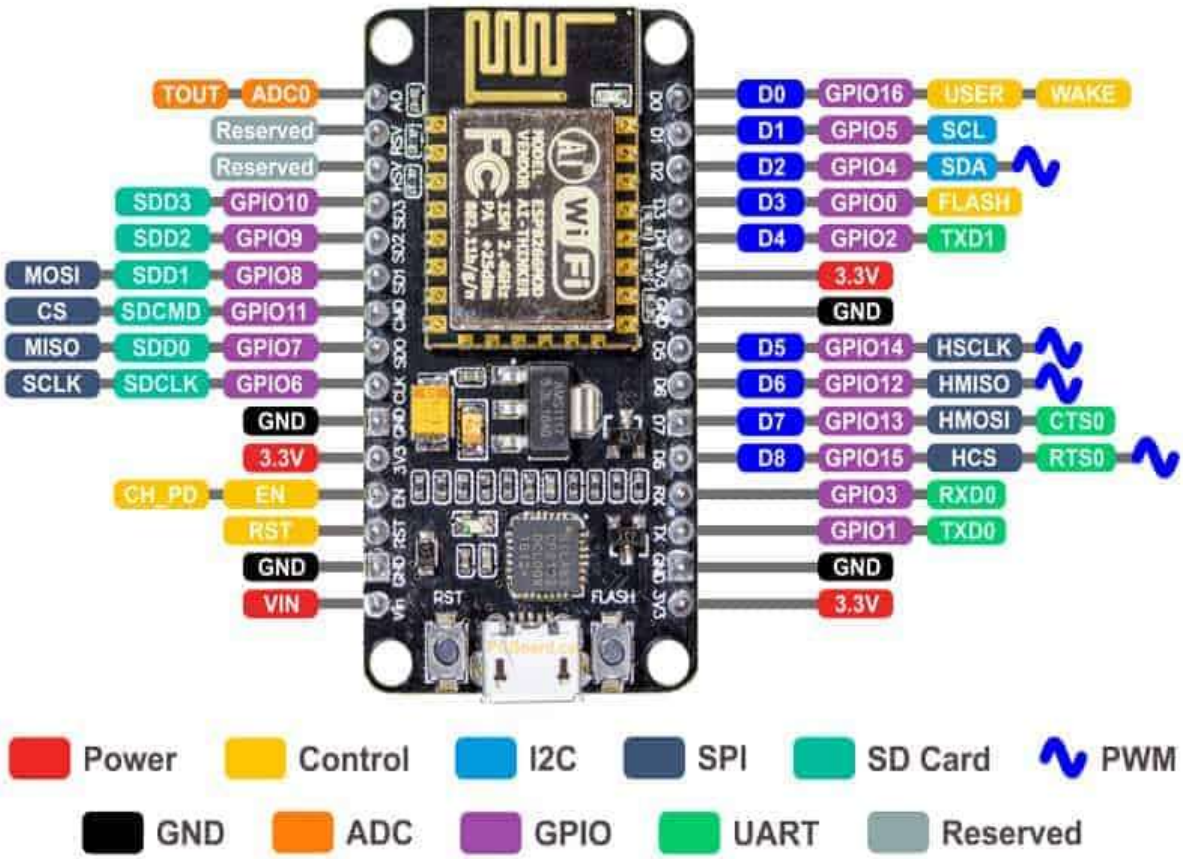

2. Water pump:

A water pump is a mechanical device designed to move water from one place to another. Commonly used in household, agricultural, and industrial applications, it plays a key role in transferring water for various purposes such as irrigation, water supply, drainage, and cooling systems. Here's a breakdown of water pump types and applications

3. **Relay**: A relay is an electromechanical switch used to control a high-power circuit with a low-power signal. In electronics and electrical systems, relays are often used to isolate and control high-power devices such as motors, pumps, and lights, using a lower-power control signal from a microcontroller, sensor, or other low-voltage device.

4. **Rechargeable Battery:**

We used 4V rechargeable DC powered battery of lead-acid It store a potential voltage up to 4V. This battery can recharge so it saves E-waste.

A rechargeable battery is an energy storage device that can be recharged and used multiple times. It operates through reversible chemical reactions that allow it to release and store energy repeatedly. Rechargeable batteries come in various types, such as lithium-ion, nickel-metal hydride, and lead-acid, each with different characteristics. For instance, lithium-ion batteries

are lightweight and have a high energy density, while lead-acid batteries are more durable and cost-effective. Rechargeable batteries are widely used in portable electronics, electric vehicles, and backup power systems, offering efficiency and long-term cost savings.

5. **Moisture sensor:** A moisture sensor is a device used to measure the water content in environments like soil, air, or materials, making it essential in fields such as agriculture, environmental monitoring, and automated irrigation. Typically, soil moisture sensors work by inserting probes into the soil, where they measure water content based on electrical resistance or capacitance. Since water conducts electricity, wetter soil has lower resistance or higher capacitance than dry soil**.**

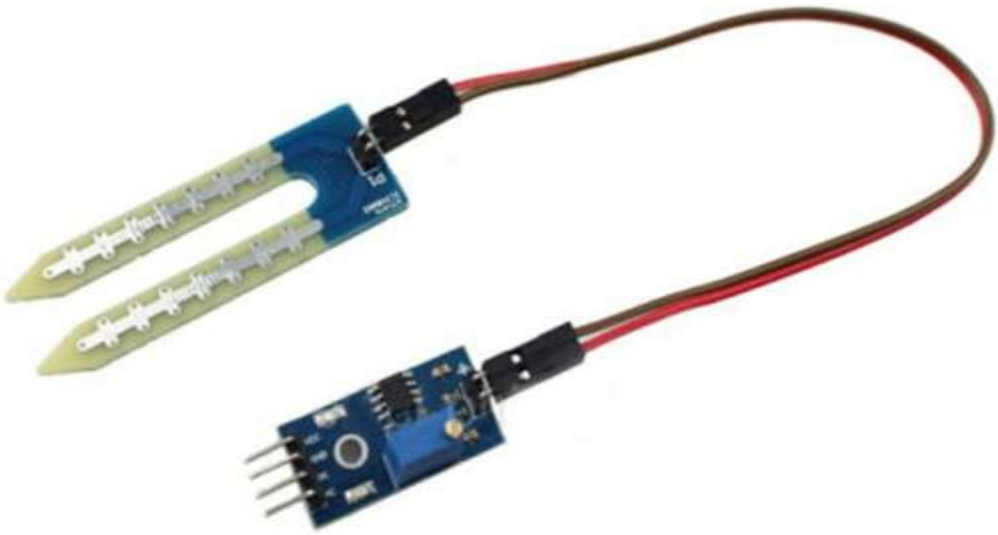

B. Circuit Diagram:

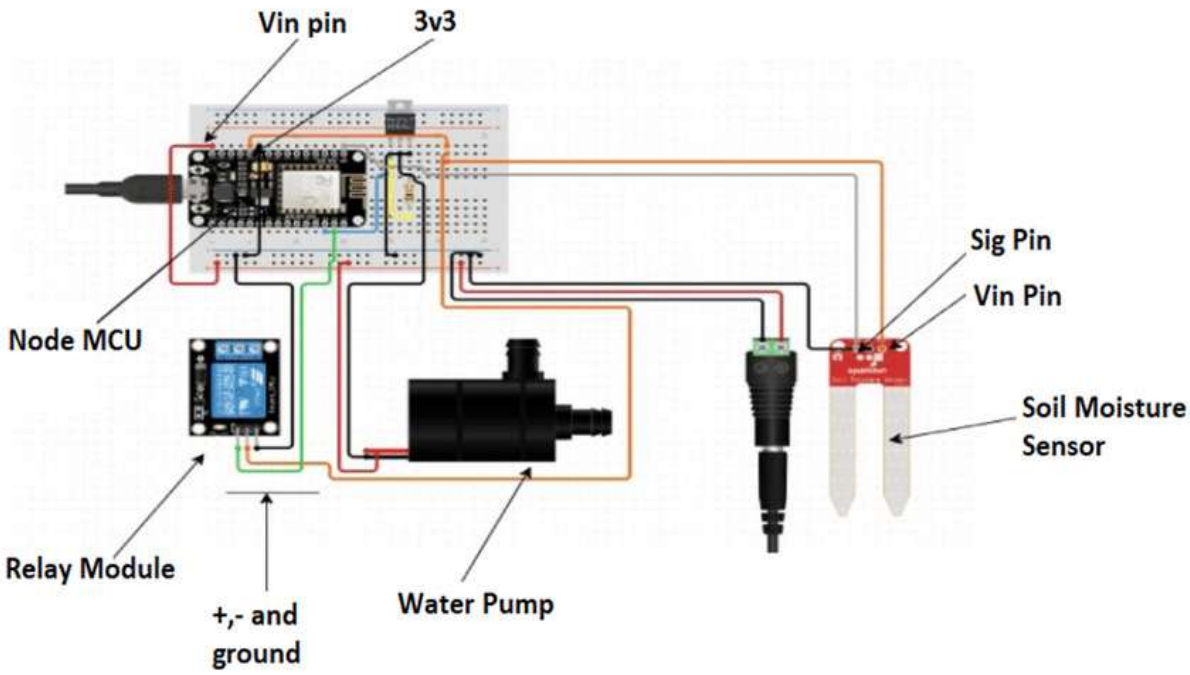

Fig. Circuit diagram of SMART irrigation system.

C. Circuit designing :

1) Soil Moisture Sensor connection :

   I. VCC to 3.3V on the ESP8266.
   II. GND to GND on the ESP8266.
   III. Analog Out to A0 on the ESP8266 (for analog soil moisture readings).

2) Relay Module connection :

   I. VCC to 5V on the ESP8266.
   II. GND to GND on the ESP8266.
   III. IN1 to D1 on the ESP8266 to control the relay.
   IV. COM and NO (Normally Open) of the relay connected to the water pump's power circuit.

3) Water Pump:

   I. Connected to an external power source through the relay module.
   II. The relay controls the connection to turn the pump on or off based on soil moisture readings

D. Code:

```
#define BLYNK_TEMPLATE_ID "TMPL3f2OlgjwK"
#define BLYNK_TEMPLATE_NAME "SMART Irrigation"
#define BLYNK_AUTH_TOKEN "u9cymSYbYmI8S9jBx0pZBR4eKC66Z5yR"
#include <ESP8266WiFi.h>
#include <BlynkSimpleEsp8266.h>
#define SOIL_SENSOR_PIN A0
#define RELAY_PIN D1
char auth[] = "u9cymSYbYmI8S9jBx0pZBR4eKC66Z5yR";
char ssid[] = "SVERI-CISCO";
char pass[] = "Cisco@123";
#define VIRTUAL_MOISTURE_PERCENT V0
#define VIRTUAL_MANUAL_MODE V1
#define VIRTUAL_MANUAL_CONTROL V3
#define VIRTUAL_SOIL_MOISTURE V2
int soilMoistureValue = 0;
int soilMoisturePercent = 0;
bool isManualMode = false;
bool isMotorOn = false;
int moistureThresholdLow = 30;
int moistureThresholdHigh = 70;
BlynkTimer timer;
void readSoilMoisture() {
  soilMoistureValue = analogRead(SOIL_SENSOR_PIN);
  soilMoisturePercent = map(soilMoistureValue, 1023, 0, 0, 100);
  Blynk.virtualWrite(VIRTUAL_MOISTURE_PERCENT, soilMoisturePercent);
  Blynk.virtualWrite(VIRTUAL_SOIL_MOISTURE, soilMoistureValue);
```

```
  if (!isManualMode) {
    if (soilMoisturePercent < moistureThresholdLow && !isMotorOn) {
      digitalWrite(RELAY_PIN, LOW);
      isMotorOn = true;
    } else if (soilMoisturePercent > moistureThresholdHigh && isMotorOn) {
      digitalWrite(RELAY_PIN, HIGH);
      isMotorOn = false;
    }
  }
}
BLYNK_WRITE(VIRTUAL_MANUAL_MODE) {
  isManualMode = param.asInt();
  if (!isManualMode && isMotorOn) {
    digitalWrite(RELAY_PIN, HIGH);
    isMotorOn = false;
  }}
BLYNK_WRITE(VIRTUAL_MANUAL_CONTROL) {
  if (isManualMode) {
    int manualMotorState = param.asInt();
    if (manualMotorState == 1 && !isMotorOn) {
      digitalWrite(RELAY_PIN, LOW);
      isMotorOn = true;
    } else if (manualMotorState == 0 && isMotorOn) {
      digitalWrite(RELAY_PIN, HIGH);
      isMotorOn = false;
    }
  }}
```

```
void setup() {
  Serial.begin(115200);
 Blynk.begin(auth, ssid, pass);
  pinMode(RELAY_PIN, OUTPUT);
  digitalWrite(RELAY_PIN, HIGH);
  timer.setInterval(2000L, readSoilMoisture);
}
void loop() {
  Blynk.run();
  timer.run();
}
```

E. Working :

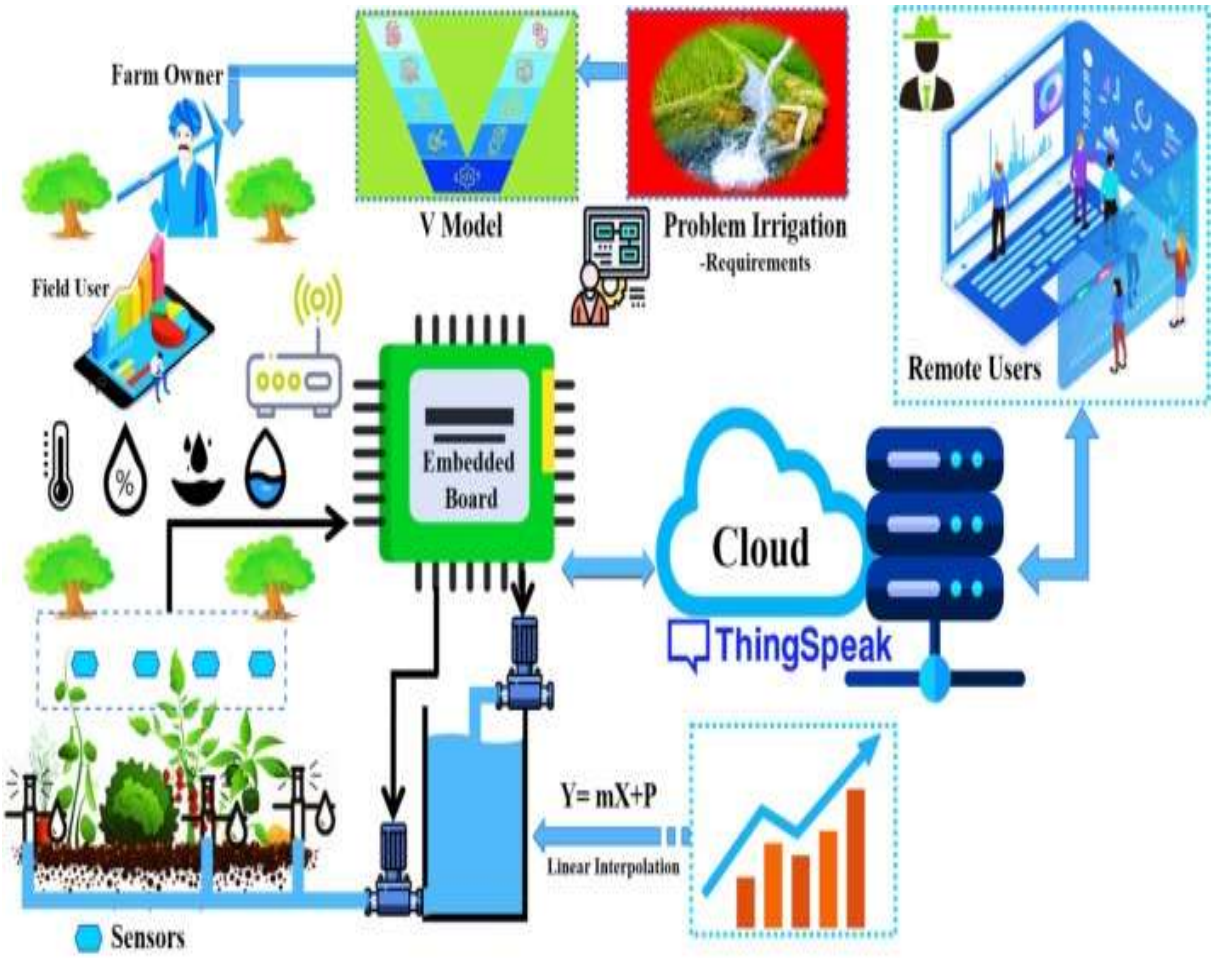

Fig. Workflow

Soil Moisture Sensor: The soil moisture sensor measures how much water is in the soil. It checks if the soil is too dry or has enough water.

Motor and Relay: The motor controls the water flow to the plants, and it's connected to a relay, which acts like a switch. The relay turns the motor on and off based on soil moisture.

Automatic and Manual Modes: There are two modes to control the motor. In Automatic Mode, the system checks the soil moisture automatically and runs the motor if the soil is dry. When the moisture level is high, it stops the motor. Manual Mode lets you control the motor directly from the Blynk app without the system's automatic checks.

Blynk App: The system is connected to the Blynk app, which shows the soil moisture level as a percentage and gives you control over the motor. You can switch between Automatic and Manual modes, and in Manual mode, you can turn the motor on or off as needed.

ESP8266 Controller: The whole system runs on an ESP8266 microcontroller, which connects to Wi-Fi and allows remote control and monitoring from the Blynk app on your phone.

F. Actual Picture Of project:

G. Advantages :-

1) This project conserve the water by providing water whenever it is required by plant so water wastage is saved.

2) Provide remote control feature so water irrigation can be controlled through internet from anywhere and anytime.

3) It maintain Health of a plant by providing water at right time.

4) It reduces labor requirement because it provide automation for plant irrigation.

H. Disadvantages :

1) This system require high initial cost for implementation.

2) It require continuous Internet connection to maintain connection with user if connection lost then system cannot perform more efficiently.

3) It require continuous power for it's operation so result in increase in cost.

4) Require time to time maintenance for efficient operation.

I. Conclusion:

We conclude from this project that SMART irrigation system makes watering plants easier and more efficient. It saves water by only watering when needed, keeps plants healthy, and lets you control everything from your phone. It's a simple way to take better care of plants with less work also it saves water.

8.0 Skill developed:

1) Electronic Circuit Designing.

2) Arduino Programming.

3) Creating IoT interface.

4) Problem Solving and troubleshooting.

9.0 Application Of Microproject:

1) SMART Irrigation can be used in small home garden where owner can't water plant regularly to maintain plant health.

2) Small Farms: Small-scale farmers can use this system to conserve water and ensure crops receive sufficient irrigation, improving crop yield and reducing water costs.

3) Nurseries grow many different kinds of plants, and each type needs a specific amount of water. This system can automatically water each plant as needed, which saves time and effort and helps the plants grow better.

4) In indoor garden in large cities.

(Mr. P. S. Valte)
Signature
Subject Teacher